TECHNICAL DRAWING

SH-005S

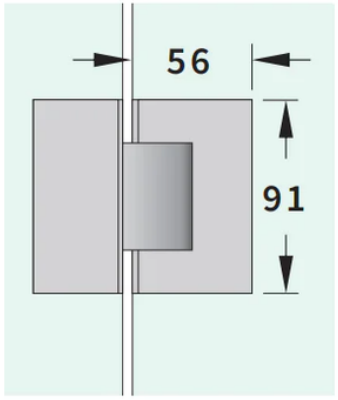

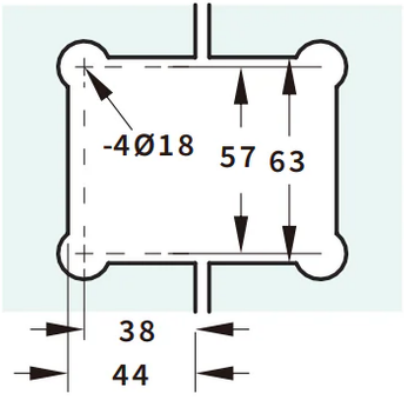

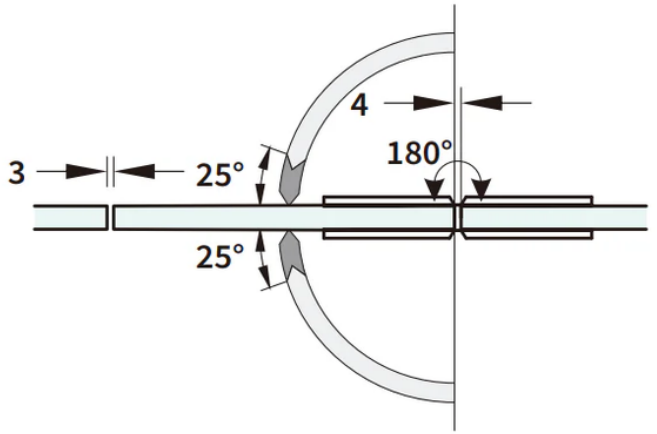

Manufacturer-supplied dimensional reference. Verify before drilling or cutting glass.