Contents

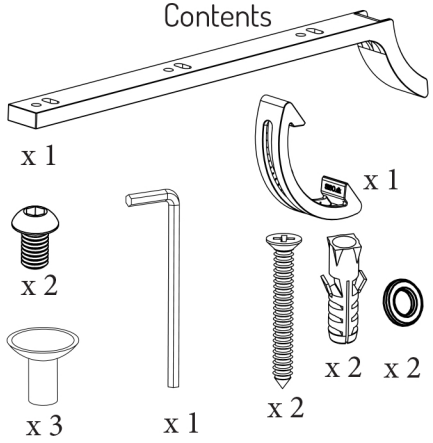

Tools needed

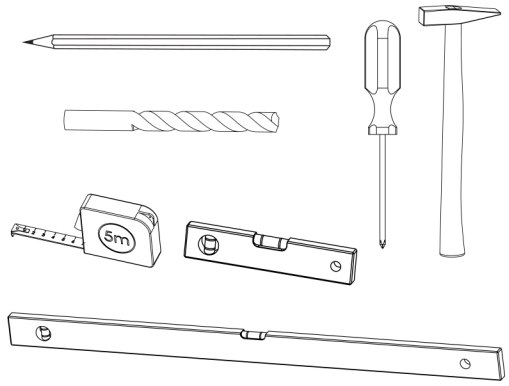

1.

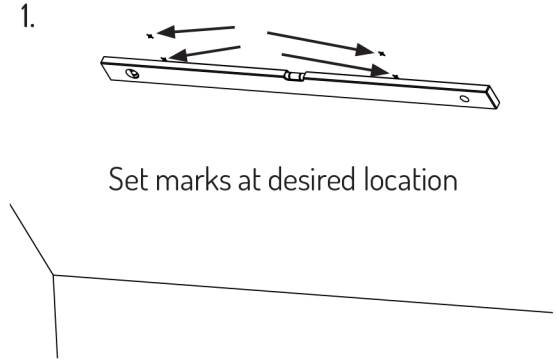

Set marks at desired location

2.

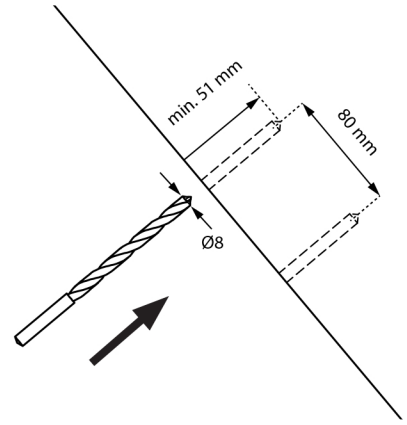

3.

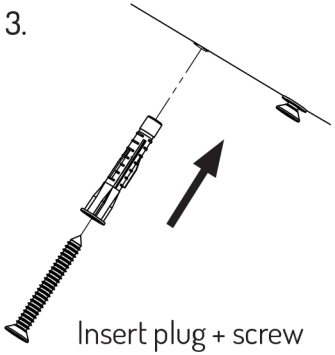

Insert plug + screw

4.

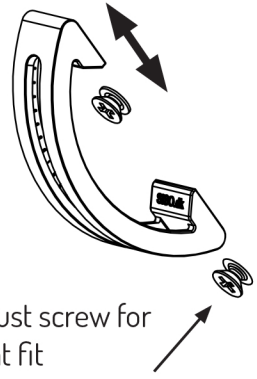

Adjust screw for tight fit

5.

Insert included suction pads when combined with glass shelf

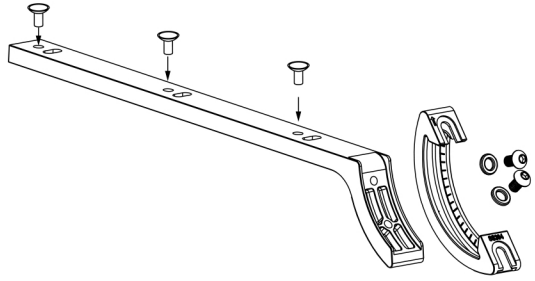

Assemble the "SLOPE" set

6.

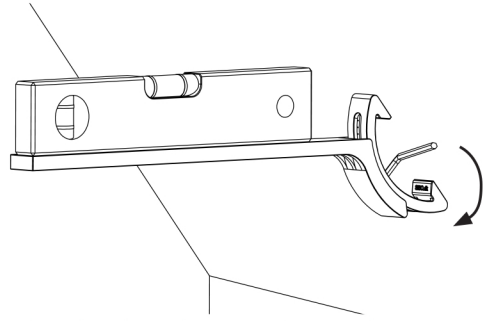

Use leveler for adjusting. Smartphone may be used with suitable app.
Tighten by allen key

SHELF BRACKET GCS-02

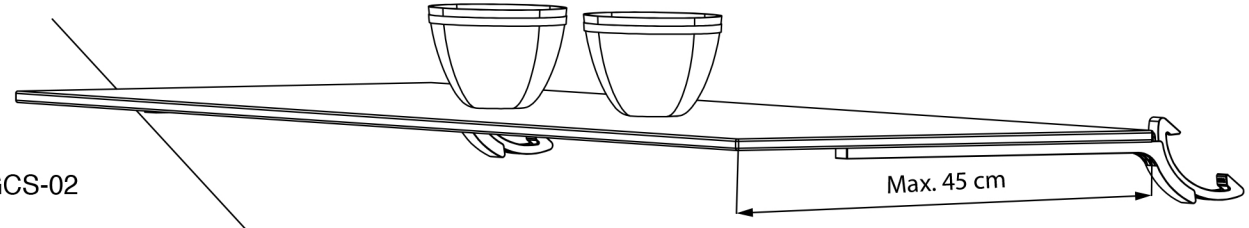

7. Mount a shelf of your own choise. (Screws not included)
Max. load capacity: 30 Kg. when using 2 sets of "SLOPE"
Max. depth of shelf: 45 cm.

THE GLASS WAREHOUSE